GB

DRAPER®

PROPANE

SPACE HEATER

47063- PSH10C SPARE PARTS DRAWING

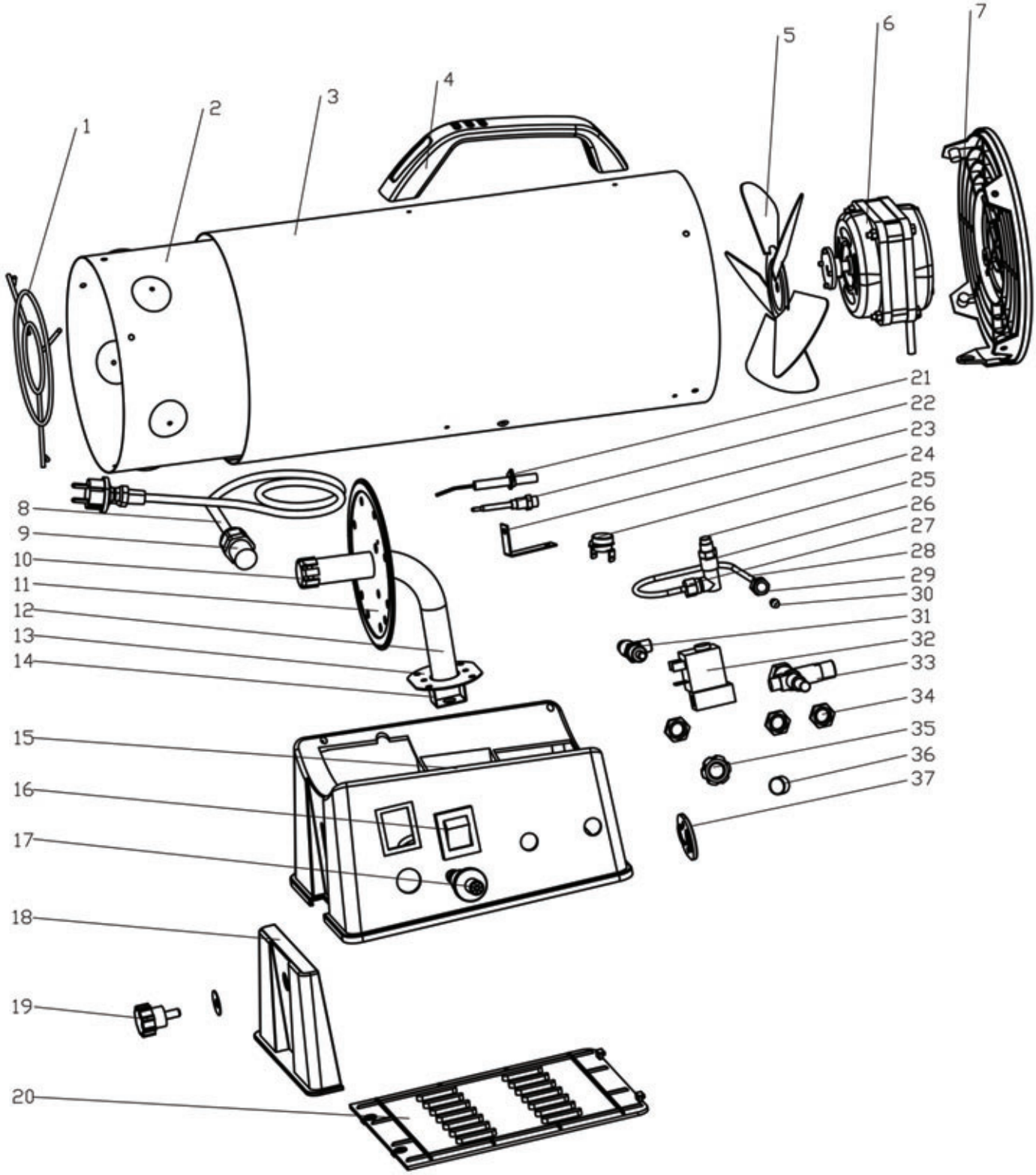

Helpline: +44 (0) 23 8049 4344 Sales Desk: +44 (0) 23 8049 4333 General Enquiries: +44 (0) 23 8026 6355 internet: drapertools.com email: sales@drapertools.com

Draper Tools Limited, Hursley Road, Chandler's Ford, Eastleigh, Hampshire. SO53 1YF UK.

GB

DRAPER®

PROPANE

SPACE HEATER

47063- PSH10C SPARE PARTS LISTING

KEY No.	PART No.	STOCK No.	DESCRIPTION
1	Y101-01	24050	Front grid
2	Y101-02	24013	Inner shell
3	Y101-03	23972	Out shell
4	Y101-04	23411	Plastic handle
5	Y101-05	23338	Fan blade
6	Y101-06	23022	Motor
7	Y101-07	22613	Fan guard
8	Y101-08	22380	Power cord
9	Y101-09	22371	Cord fixation
10	Y101-10	22358	Burner assembly
11	Y101-11	21655	Baffle
12	Y101-12	21535	Intake tube
13	Y101-13	21036	Plate
14	Y101-14	21035	Injection
15	Y101-15	20841	Base
16	Y101-16	20840	Power switch
17	Y101-17	20838	Igniter
18	Y101-18	20784	Height controller
19	Y101-19	20592	Round bolt
20	Y101-20	20579	Base cover
21	Y101-21	20569	Ignition needle
22	Y101-22	20567	Thermocouple
23	Y101-23	20565	Thermostat clip
24	Y101-24	20562	Head thermostat
25	Y101-25	20557	Gas nozzle
26	Y101-26	20555	Nozzle seat
27	Y101-27	20552	Fixation nut M8
28	Y101-28	20536	Fuel tube
29	Y101-29	20533	Fixation nut G1/8
30	Y101-30	19976	O-ring
31	Y101-31	19710	Adjustment valve
32	Y101-32	19617	Electromagnetic valve
33	Y101-33	19571	Flameout protector
34	Y101-34	19229	Fixation nut
35	Y101-35	19216	Plastic knob
36	Y101-36	19127	Protection guard
37	Y101-37	19126	Fixation nut for gas inlet
-	Y101-REG	35749	Regulator and hose

KEY No.	PART No.	STOCK No.	DESCRIPTION

Helpline: +44 (0) 23 8049 4344 Sales Desk: +44 (0) 23 8049 4333 General Enquiries: +44 (0) 23 8026 6355 internet: drapertools.com email: sales@drapertools.com

Draper Tools Limited, Hursley Road, Chandler's Ford, Eastleigh, Hampshire. SO53 1YF UK.