20V BRUSHLESS 115mm

ANGLE GRINDER

GB

55953 - XP20AG115 SPARE PARTS DRAWING

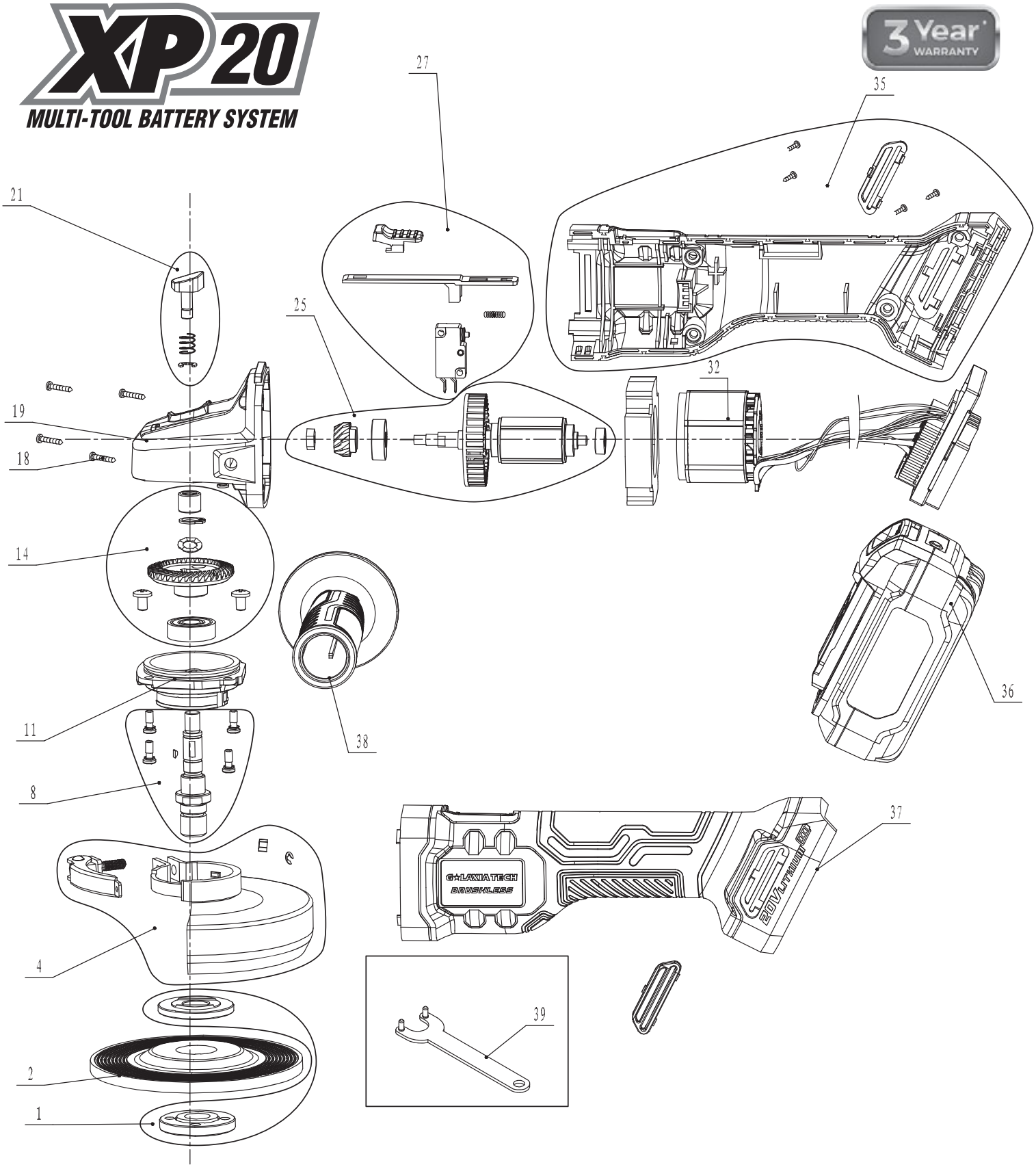

Helpline: +44 (0) 23 8049 4344 Sales Desk: +44 (0) 23 8049 4333 General Enquiries: +44 (0) 23 8026 6355 internet: drapertools.com email: sales@drapertools.com

Draper Tools Limited, Hursley Road, Chandler's Ford, Eastleigh, Hampshire. SO53 1YF UK.

TAKC0219

20V BRUSHLESS 115mm

ANGLE GRINDER

GB

55953 - XP20AG115 SPARE PARTS LISTING

DRAPER Expert

XP20 MULTI-TOOL BATTERY SYSTEM

3 Year WARRANTY

KEY No.	PART No.	STOCK No.	DESCRIPTION
1	YXP20AG115-1	97540	Flange (x2)
2			Grinding wheel(without)
4	YXP20AG115-4	97541	Grinding wheel guard assembly
8	YXP20AG115-8	97547	Spindle assembly
11	YXP20AG115-11	97548	front cover
14	YXP20AG115-14	97550	Big gear assembly
18	YXP20AG115-18	97551	Screw st4.2*25 (set x4)
19	YXP20AG115-19	97552	Gear box
21	YXP20AG115-21	97553	Spindle lock assembly
25	YXP20AG115-25	97554	Rotor assembly
27	YXP20AG115-27	97555	Switch assembly
32	YXP20AG115-32	97556	Stator
35	YXP20AG115-35	97557	Right housing assembky
36			Battery pack
37	YXP20AG115-37	97558	Left housing
38	YXP20AG115-38	97559	Auxillary handle
39	YXP20AG115-39	97560	Spanner
40	AYXP20AG115-40	97561	Cutting wheel guard

KEY No.	PART No.	STOCK No.	DESCRIPTION

Helpline: +44 (0) 23 8049 4344 Sales Desk: +44 (0) 23 8049 4333 General Enquiries: +44 (0) 23 8026 6355 internet: drapertools.com email: sales@drapertools.com

Draper Tools Limited, Hursley Road, Chandler's Ford, Eastleigh, Hampshire. SO53 1YF UK.