DRAPER®
THE TOOL COMPANY

AIR NAILER

■ STOCK No.57559. ■ PART No.AN10-32.

SPARE PARTS LISTING 12/99

KEY No.	PART No.	STOCK No.	DESCRIPTION
1	YAS-HS0520B	60793	Bolt
2	YAS-SN0500W	60794	Spring washer
3	YAS-11100302	60840	Cap
4	YAS-12100401	60796	Seal
5	YAS-12100501	60797	Spring
6	YAS-0R1425R	60798	O-ring
7	YAS-11100701	60876	Cap seal
8A	YAS-12100801A	60868	Piston head assy.
8	YAS-12100801	60800	Piston head valve
9	YAS-0R2535R	60801	O-ring
10	YAS-12101001	60802	Stopper
11	YAS-OR3224R	60803	O-ring
13	YAS-OR2331R	60805	O-ring
14A-1	YAS-11001401A	60928	Driver assembly
18	YAS-OR4630R	60884	O-ring
19	YAS-11101902	60929	Cylinder
19-1	YAS-11101903	60930	Collar
20	YAS-11002001	60931	Bumper
21	YAS-OR3018R	60932	O-ring
23	YAS-11102309	60890	Body
24	YAS-OR1919H	60815	O-ring
25	YAS-15505201	60933	Joint guide
26	YAS-11002601	60819	Spring
27	YAS-11002702	60820	Guide safety lever
31	YAS-11003101	60935	Safety lever
32	YAS-12103202	60827	Stepped pin
35A-1	YAS-0R0319R	60828	O-ring
35A-2	YAS-11003401	60829	Trigger valve head
35A-3	YAS-11006901	60830	Spring
35A-4	YAS-11003503	60934	Trigger valve stem
35A-5	YAS-OR2515H	60832	O-ring
35A-6	YAS-0R1119R	60895	O-ring
35A-7	YAS-11003803	60833	Trigger valve guide
35A-8	YAS-13904501A	60836	Trigger assembly
41A	YAS-13104101A	60898	Latch
42	YAS-US0520B	60936	Bolt
43	YAS-SW0500N	60794	Spring washer
44A	YAS-11504401A	60937	Driver guide cover assy.

KEY No.	PART No.	STOCK No.	DESCRIPTION
44	YAS-11504401	60938	Driver guide cover
45	YAS-12104501	60900	Plate
46	YAS-HS0412B	60901	Bolt
47	YAS-11004703	60939	Driver guide
48	YAS-11004803	60940	Magazine cover
49	YAS-SS0412S	60904	Set screw
50	YAS-11505001	60941	Magazine
51	YAS-HS0408B	60906	Bolt
51-1	YAS-SW0400W	60917	Spring washer
52	YAS-11005201	60942	Tail cover
53	YAS-12105301	60944	Pusher
54	YAS-12105401	60909	Spring
55	YAS-12105501	60910	Nail guide liner
57	YAS-HS0507B	60945	Bolt
58	YAS-12105801	60912	Shaft
59	YAS-13205901	60913	Stopper
60	YAS-12106001	60914	Spring
61	YAS-12106101	60946	Bracket
62	YAS-ER0200H	60859	E-ring
63	YAS-HS0408B	66906	Bolt
63-1	YAS-SW0400W	60917	Spring washer
64	YAS-HS0516B	60918	Bolt
65	YAS-LN0500N	60862	Lock nut
66	YAS-11106601	60919	Cover
67	YAS-12106401	60864	Air plug
68	YAS-0R4030R	60865	O-ring
71	YAS-US0506B	60947	Bolt
72	YAS-FW0512W	60948	Washer
73	YAS-12103301	60922	Seal
74	YAS-13907403	60923	Exhaust cover
76	YAS-RP3018S	60949	Rolled pin

DRAPER TOOLS LIMITED, HURSLEY ROAD, CHANDLER'S FORD, EASTLEIGH, HAMPSHIRE. SO53 1YF. ENGLAND.

AIR NAILER

■ STOCK No.57559. ■ PART No.AN10-32.

PARTS DRAWING 12/99

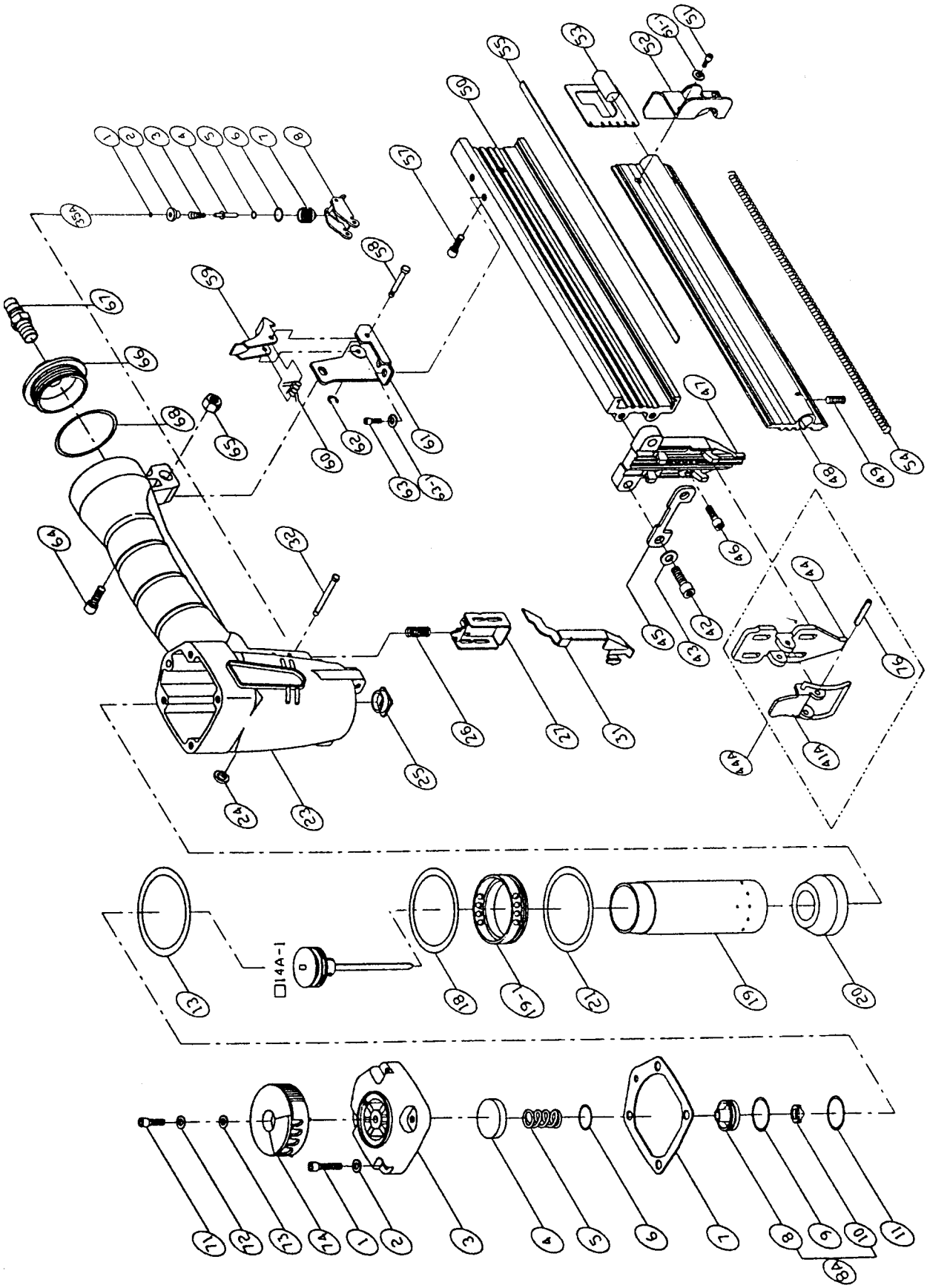

POWER DIVISION HELPLINE: (023) 8049 4344

DRAPER TOOLS LIMITED, HURSLEY ROAD, CHANDLER'S FORD, EASTLEIGH, HAMPSHIRE. SO53 1YF. ENGLAND.