GB

230V SUBMERSIBLE

DIRTY WATER PUMP

WITH FLOAT SWITCH

98919 - SWP420 SPARE PARTS LISTING

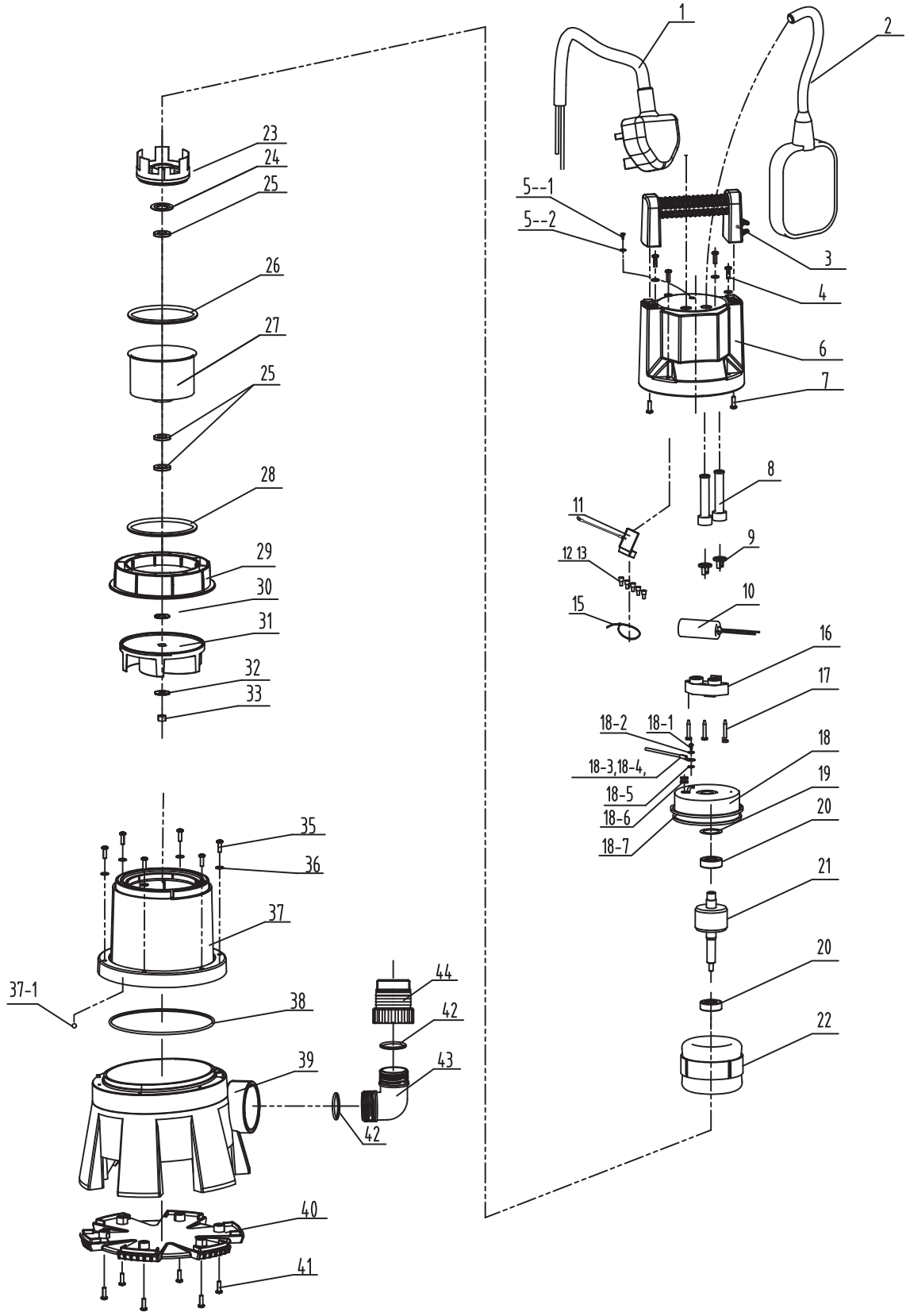

Helpline: +44 (0) 23 8049 4344 Sales Desk: +44 (0) 23 8049 4333 General Enquiries: +44 (0) 23 8026 6355 internet: drapertools.com email: sales@drapertools.com

Draper Tools Limited, Hursley Road, Chandler's Ford, Eastleigh, Hampshire. SO53 1YF UK.

GB

230V SUBMERSIBLE

DIRTY WATER PUMP

WITH FLOAT SWITCH

98919 - SWP420 SPARE PARTS LISTING

KEY No.	PART No.	STOCK No.	DESCRIPTION
1	Y-SWP420-01	91461	CABLE
2	Y-SWP420-02	91472	FLOAT SWITCH
3	Y-SWP420-03	91473	PUMP HANDLE
4	Y-SWP150IFS-44	90937	CROSS RECESSED TAPPING SCREW
6	Y-SWP420-06	91476	PUMP REAR HOUSING
7	Y-SWP420-07	91478	SCREW ASSEMBLY
8	Y-SWP420-08	91480	CABLE SHEATH
9	Y-SWP420-09	91482	CABLE RETAINER
10	Y-SWP420-10	91483	16 UF CAPACITOR
11	Y-SWP420-11	91484	GROUND COVER WELDED COMPONENTS
12	Y-SWP420-12	91486	NYLON SAFETY WIRE PRESSINGS
15	Y-SWP420-15	91488	TIE
16	Y-SWP150IFS-27	90900	CABLE STAY
17	Y-SWP420-17	91489	TAPPING SCREW
18	Y-SWP420-18	91490	SHEET METAL BACK COVER COMPLETE
19	Y-SWP150IFS-30	90906	CORRUGATED WASHER
20	Y-SWP150IFS-31	90907	BEARING
21	Y-SWP420-21	91491	ROTOR
22	Y-SWP420-22	91492	STATOR
23	Y-SWP420-23	91495	FRONT BUSHING
24	Y-SWP150IFS-35	90913	GASKET
25	Y-SWP150IFS-36	90914	OIL SEAL
26	Y-SWP150IFS-37	90916	O RING
27	Y-SWP420-27	91519	MOTOR FRONT COVER
28	Y-SWP150IFS-40	90926	O RING
29	Y-SWP420-29	91597	LOCATION RING
30	Y-SWP420-30	91601	ADJUSTING GASKET
31	Y-SWP420-31	91610	IMPELLER
32	Y-SWP420-32	91611	ADJUSTING GASKET
33	Y-SP53-11	90530	NUT
35	Y-SWP420-35	91618	CROSS RECESSED TAPPING SCREW
36	Y-SWP420-36	91630	GASKET
37	Y-SWP420-37	91631	MAIN PUMP HOUSING
38	Y-SWP420-38	91636	O RING
39	Y-SWP420-39	91637	PUMP BASE
40	Y-SWP420-40	91638	BASE PLATE
41	Y-SWP420-41	91642	TAPPING SCREW
42	Y-SWP420-42	91644	supply together with 91646
43	Y-SWP420-43	91645	supply together with 91646
44	Y-SWP420-44	91646	OUTPUT CONNECTOR
5--1	Y-SWP420-5.1	91647	TAPPING SCREW AND O RING

KEY No.	PART No.	STOCK No.	DESCRIPTION

Helpline: +44 (0) 23 8049 4344 Sales Desk: +44 (0) 23 8049 4333 General Enquiries: +44 (0) 23 8026 6355 internet: drapertools.com email: sales@drapertools.com

Draper Tools Limited, Hursley Road, Chandler's Ford, Eastleigh, Hampshire. SO53 1YF UK.