DWS/HG/SET - SPARE PARTS DIAGRAM

V1.0 12/2009

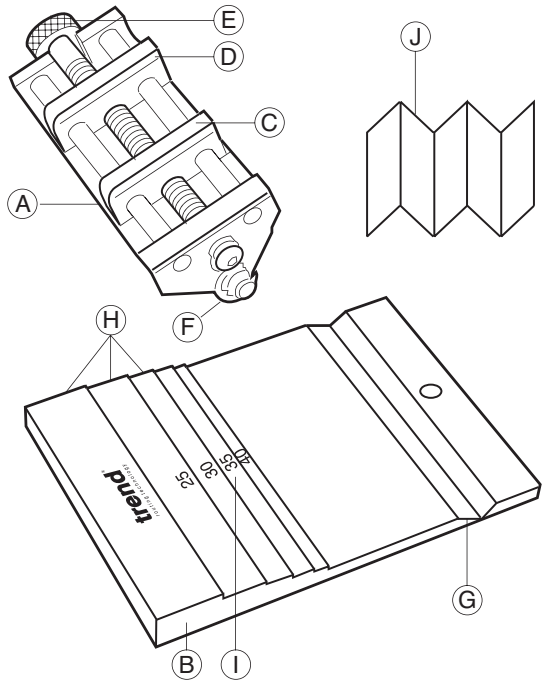

Item	Qty	Desc.	Ref. (1 off)
A	1	Diamond whetstone honing guide	DWS/HG/01
B	1	Diamond honing guide setting device	DWS/HG/02
J	1	Instruction	INST/DWS/HG