3-IN-1

200A MULTI PROCESS WELDER

GB

70043 – MW200A SPARE PARTS DRAWING

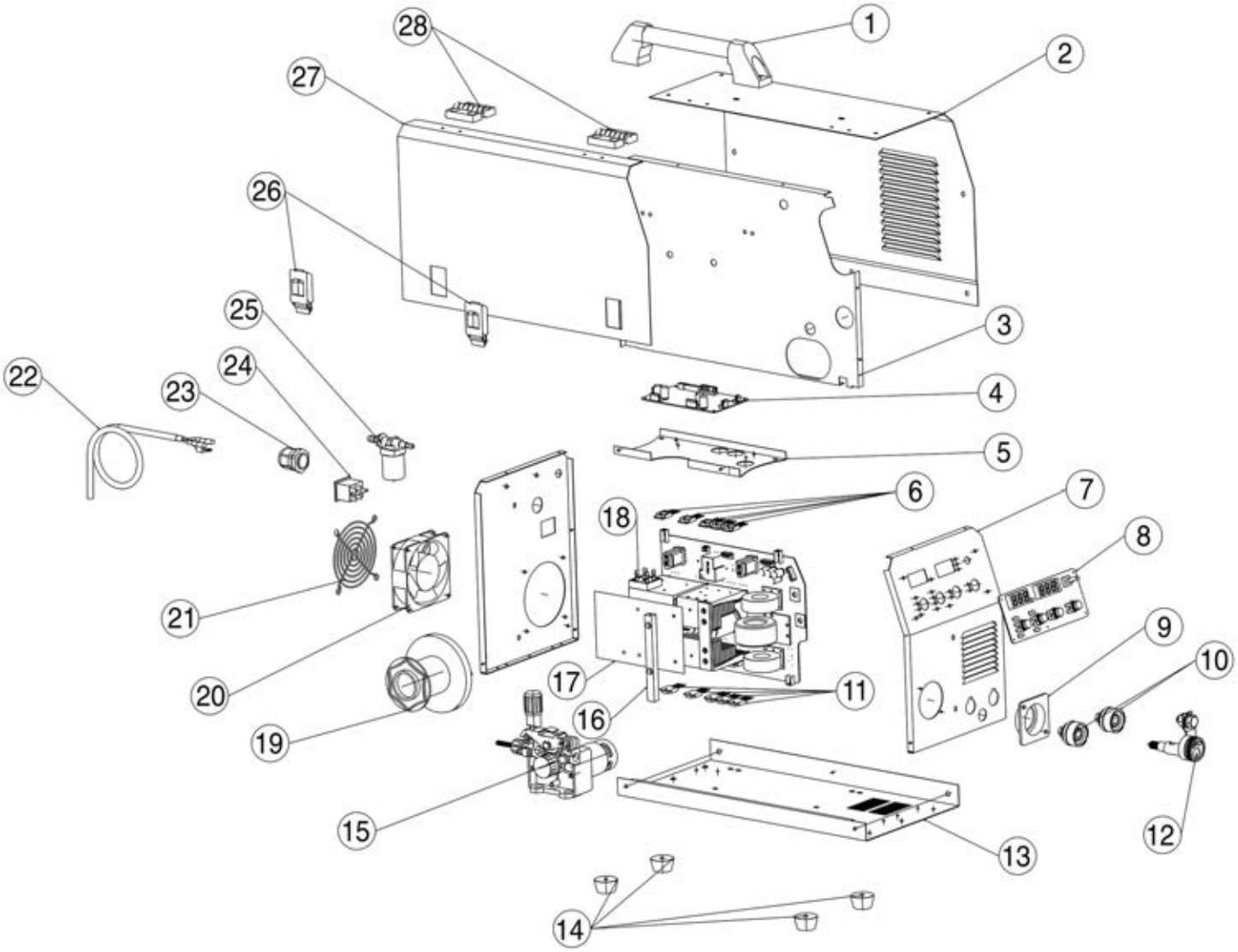

Helpline: +44 (0) 23 8049 4344 Sales Desk: +44 (0) 23 8049 4333 General Enquiries: +44 (0) 23 8026 6355 internet: drapertools.com email: sales@drapertools.com

Draper Tools Limited, Hursley Road, Chandler's Ford, Eastleigh, Hampshire. SO53 1YF UK.

3-IN-1

200A MULTI PROCESS WELDER

GB

70043 – MW200A SPARE PARTS LISTING

KEY No.	PART No.	STOCK No.	DESCRIPTION
1			(NP) Handle
2			(NP) Side plate
3			(NP) Medialpartition
4	YMW200A-4	94861	Control board
5			(NP) Small partition
6			(NP) Front panel
7	YMW200A-8	94863	Display meter
8			(NP) Europe socket base
9			(NP) Quick coupling
10	YMW200A-12	94864	Europe socket
11			(NP) Baseplate
12			(NP) Footing
13	YMW200A-15	94866	Wire feeder
14			(NP) Support bar
15	YMW200A-17A	94867	PCB Board Assembly
16			
17			
18			
19	YMW200A-19	94872	Wire spool
20	YMW200A-20	94873	Fan
21			(NP) Mesh
22			(NP) Power cable
23	YMW200A-23	94879	Strain relief clamp
24	YMW200A-24	94883	Switch
25	YMW200A-25	94884	Magnetic valve
26	YMW200A-26	94885	Clip-on
27			(NP) Clamshell plate
28	YMW200A-28	94886	Hinge

KEY No.	PART No.	STOCK No.	DESCRIPTION