GAS/GASLESS

160A MIG INVERTER MULTI WELDER

GB

70047 – MW160A SPARE PARTS DRAWING

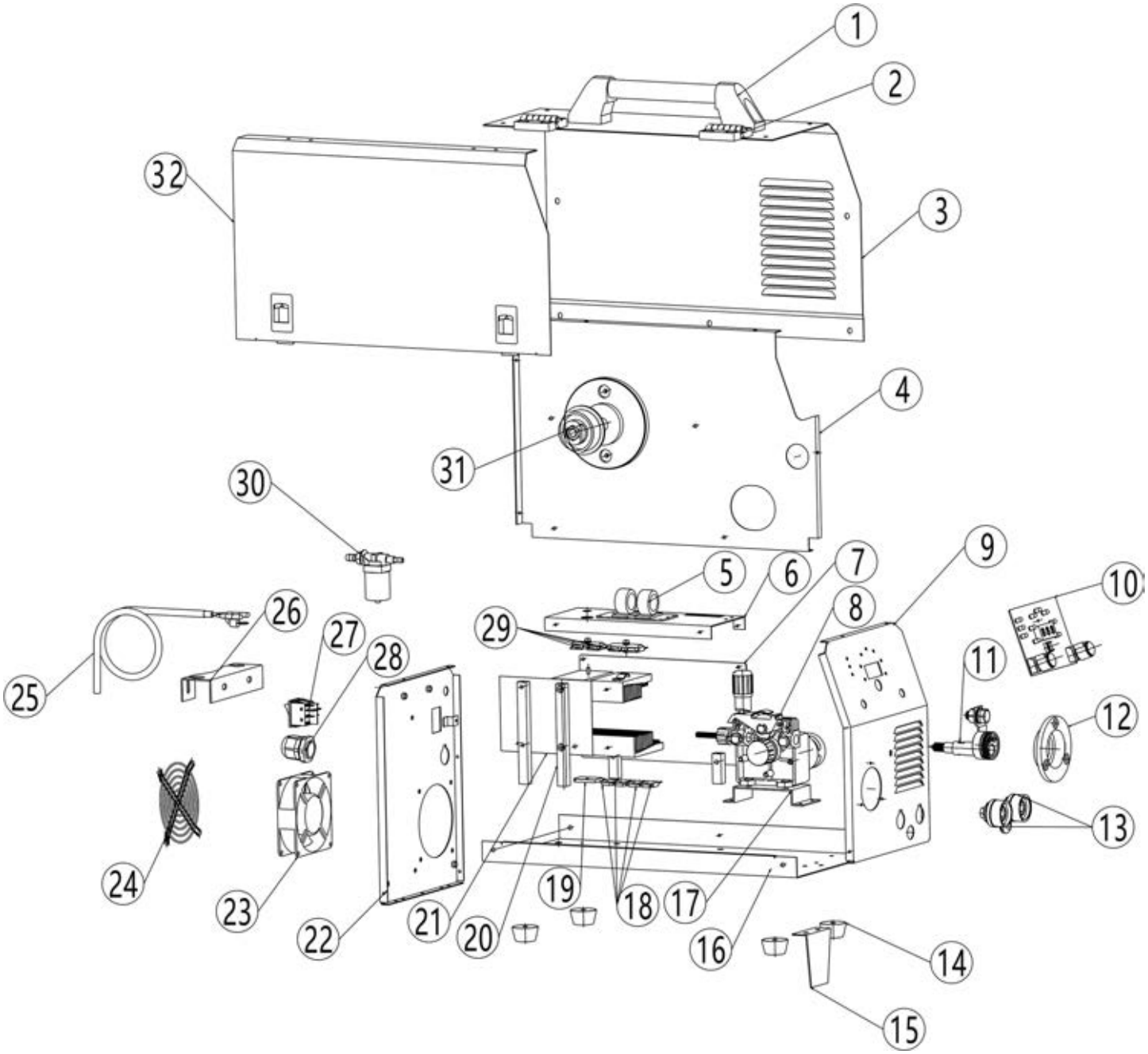

Helpline: +44 (0) 23 8049 4344 Sales Desk: +44 (0) 23 8049 4333 General Enquiries: +44 (0) 23 8026 6355 internet: drapertools.com email: sales@drapertools.com

Draper Tools Limited, Hursley Road, Chandler's Ford, Eastleigh, Hampshire. SO53 1YF UK.

GAS/GASLESS

160A MIG INVERTER MULTI WELDER

GB

70047 – MW160A SPARE PARTS LISTING

KEY No.	PART No.	STOCK No.	DESCRIPTION
1	YMW160A-1	02489	Handle
2	YMW160A-2	02490	Hinge
3			(N/P) Side plate
4			(N/P) Medial partition
5	YMW160A-5	02491	Filter board
6			(N/P) Small partition
7	YMW160A-7	02492	Main PCB board
8	YMW160A-8	02493	Wire feeder
9			(N/P) Front panel
10	YMW160A-10	02494	Control PCB board
11	YMW160A-11	02495	Europe socket
12			(N/P) Europe socket base
13	YMW160A-13	02496	Quick coupling
14	YMW160A-14	02497	Footing
15	YMW160A-15	02501	Support
16			(N/P) Baseplate
17			(N/P) Holder
18	YMW160A-18	02502	Diode
19	YMW160A-19	02503	Rectifier
20			(N/P) Support bar
21			(N/P) Epoxy plate
22			(N/P) Back panel
23	YMW160A-23	02506	Fan
24			(N/P) Mesh
25	YMW160A-25	02507	Power cable
26			(N/P) Gas bottle hoder
27	YMW160A-27	02508	On/off switch
28			(N/P) Strain relief clamp
29	YMW160A-29	02509	IGBT
30	YMW160A-30	02510	Magnetic valve
31	YMW160A-31	02511	Wire spool
32			(N/P) Clamshell plate

KEY No.	PART No.	STOCK No.	DESCRIPTION

Helpline: +44 (0) 23 8049 4344 Sales Desk: +44 (0) 23 8049 4333 General Enquiries: +44 (0) 23 8026 6355 internet: drapertools.com email: sales@drapertools.com

Draper Tools Limited, Hursley Road, Chandler's Ford, Eastleigh, Hampshire. SO53 1YF UK.